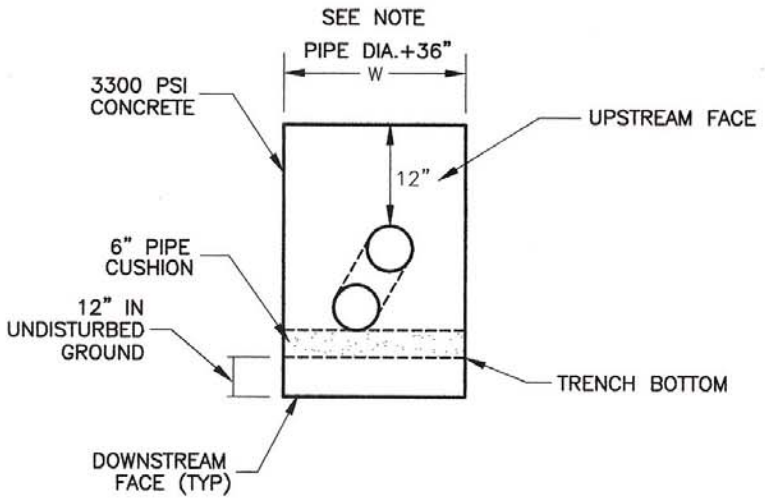

NOTE:
ANCHOR WIDTH INCLUDES A 6" NOTCH INTO UNDISTURBED GROUND ON BOTH SIDES. ANCHOR WIDTH EQUALS TRENCH WIDTH PLUS 12".

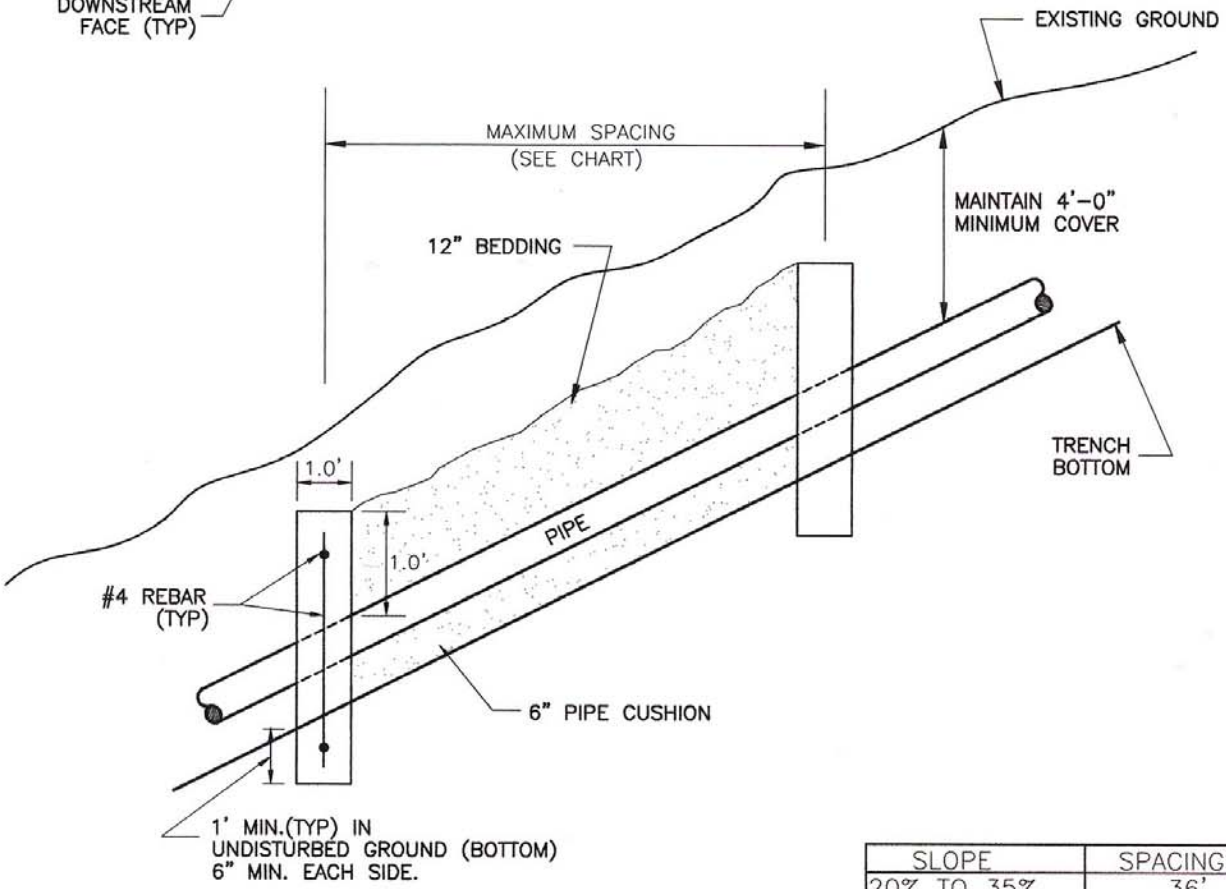

SLOPE	SPACING
20% TO 35%	36'
35% TO 50%	24'
50% AND OVER	16'

STANDARD DETAIL

PIPE ANCHOR FOR STEEP SLOPE SEWERS

NOT TO SCALE	06/01	DWG. NO.5B